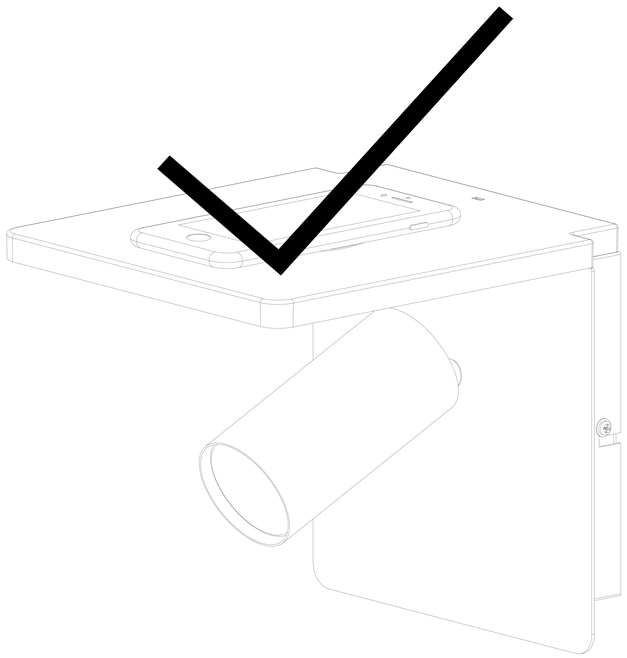

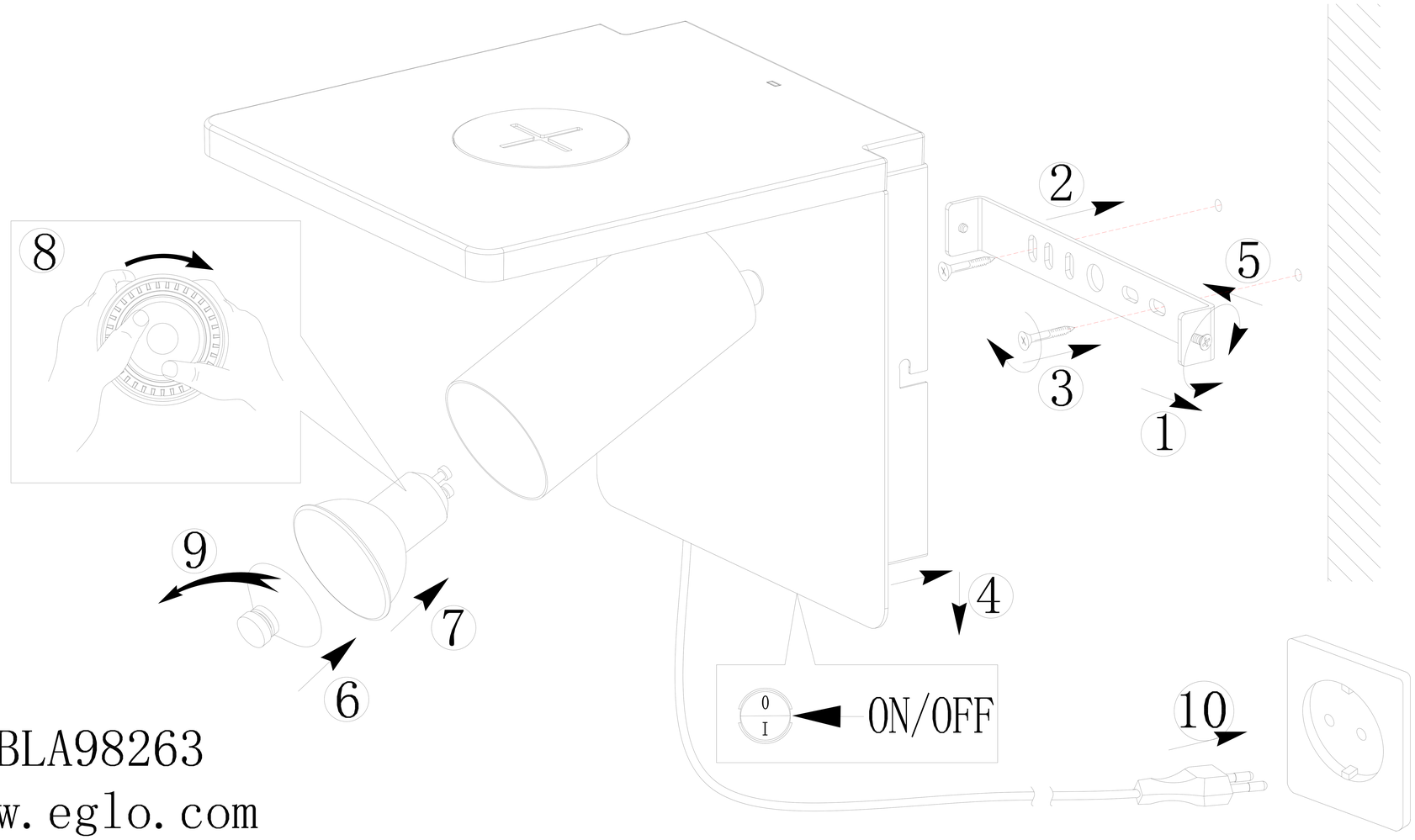

BLA98263

www.eglo.com

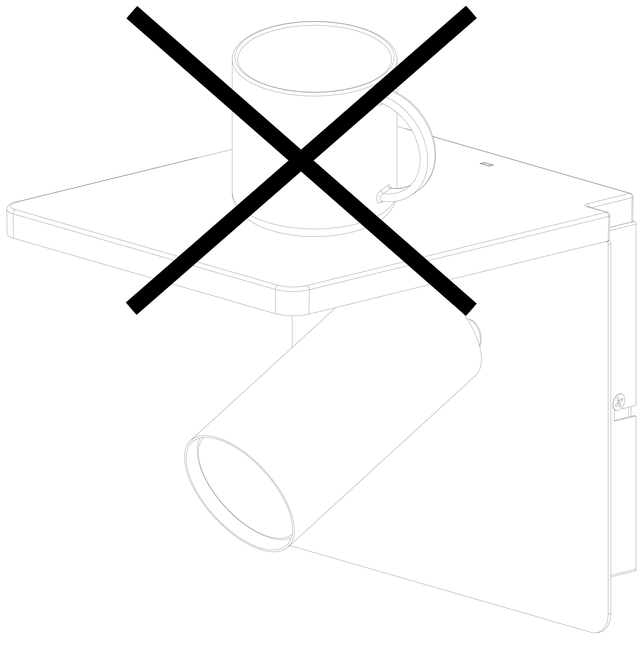

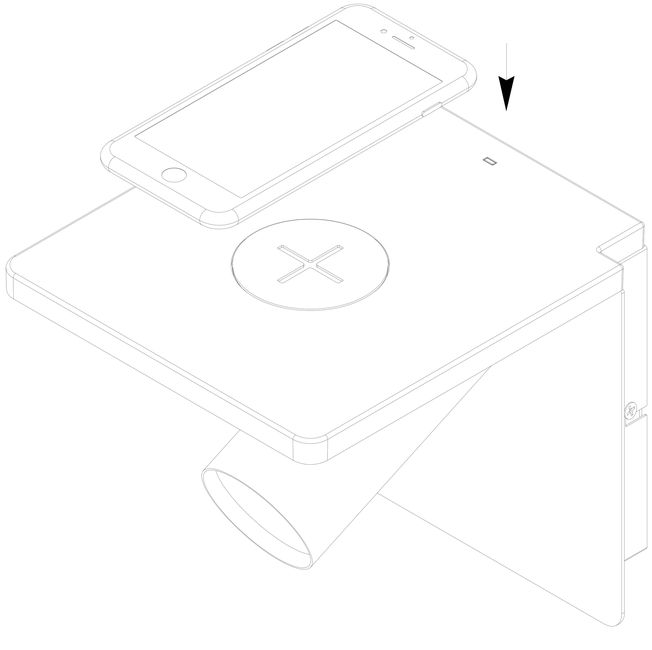

ON/Blue

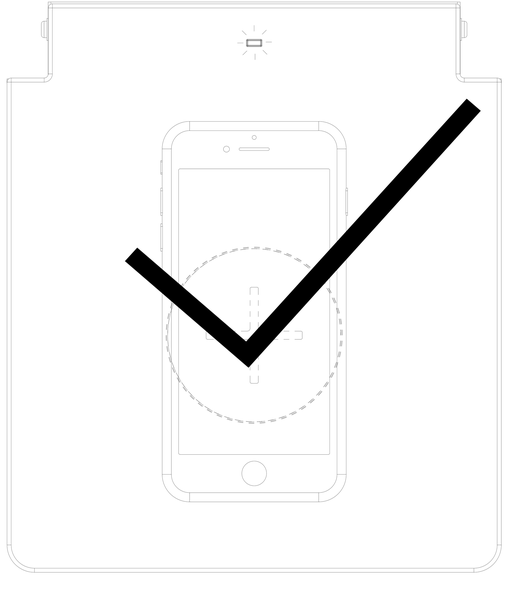
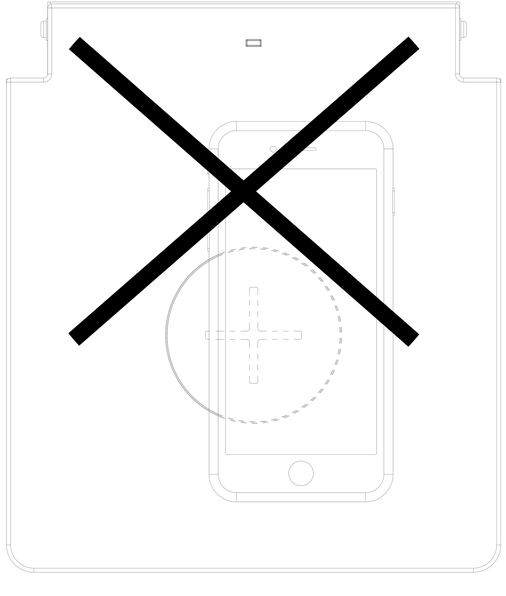
OFF